CTP346 Catphan® Low Contrast Phantom Manual

WARRANTY
THE PHANTOM LABORATORY INCORPORATED ("Seller") warrants that this product shall remain in good working order and free of all material defects for a period of one (1) year following the date of purchase. If, prior to the expiration of the one (1) year warranty period, the product becomes defective, Buyer shall return the product to the Seller at:

By Truck	By Mail
The Phantom Laboratory, Incorporated	The Phantom Laboratory, Incorporated
2727 State Route 29	PO Box 511
Greenwich, NY 12834	Salem, NY 12865-0511

Seller shall, at Seller's sole option, repair or replace the defective product. The Warranty does not cover damage to the product resulting from accident or misuse.

IF THE PRODUCT IS NOT IN GOOD WORKING ORDER AS WARRANTED, THE SOLE AND EXCLUSIVE REMEDY SHALL BE REPAIR OR REPLACEMENT, AT SELLER'S OPTION. IN NO EVENT SHALL SELLER BE LIABLE FOR ANY DAMAGES IN EXCESS OF THE PURCHASE PRICE OF THE PRODUCT. THIS LIMITATION APPLIES TO DAMAGES OF ANY KIND, INCLUDING, BUT NOT LIMITED TO, DIRECT OR INDIRECT DAMAGES, LOST PROFITS, OR OTHER SPECIAL, INCIDENTAL, OR CONSEQUENTIAL DAMAGES, WHETHER FOR BREACH OF CONTRACT, TORT OR OTHERWISE, OR WHETHER ARISING OUT OF THE USE OF OR INABILITY TO USE THE PRODUCT. ALL OTHER EXPRESS OR IMPLIED WARRANTIES, INCLUDING, BUT NOT LIMITED TO, THE IMPLIED WARRANTY OF MERCHANT ABILITY AND FITNESS FOR PARTICULAR PURPOSE, ARE HEREBY DISCLAIMED.

WARNING
This product has an FH3-4 mm/min flame rating and is considered to be flammable. It is advised not to expose this product to open flame or high temperature (over 125° Celsius or 250° Fahrenheit) heating elements.

CTP346

10-March-2022

The Phantom Laboratory

Catphan® 346 Phantom Manual

Contents

Indications for Use

The Catphan® 346 is designed for evaluation of low contrast performance in CT scanners.

Introduction

The Phantom Laboratory, Incorporated developed the Catphan® 346 phantom with the CTP344-1 low contrast module to measure low contrast sensitivity.

The phantom contains 3 sets of low contrast rods that are described in this manual.

If you have questions about this or other Catphan phantoms please contact The Phantom Laboratory at the following address:

The Phantom Laboratory, Incorporated
PO Box 511, Salem NY 12865 USA
Phone: 800-525-1190 or 518-692-1190
Fax: 518-692-3329

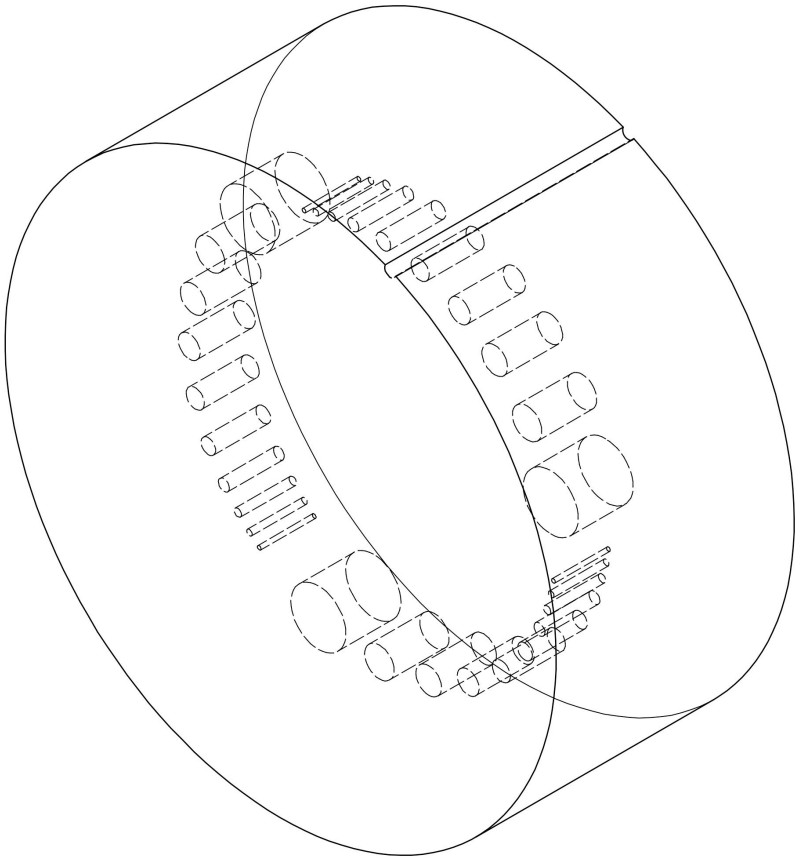

CTP344-1 Low Contrast Module

Catphan® 346 Drawing

The Catphan® 346 Phantom contains the CTP344-1 low contrast module along with the CTP486-5 uniformity module.

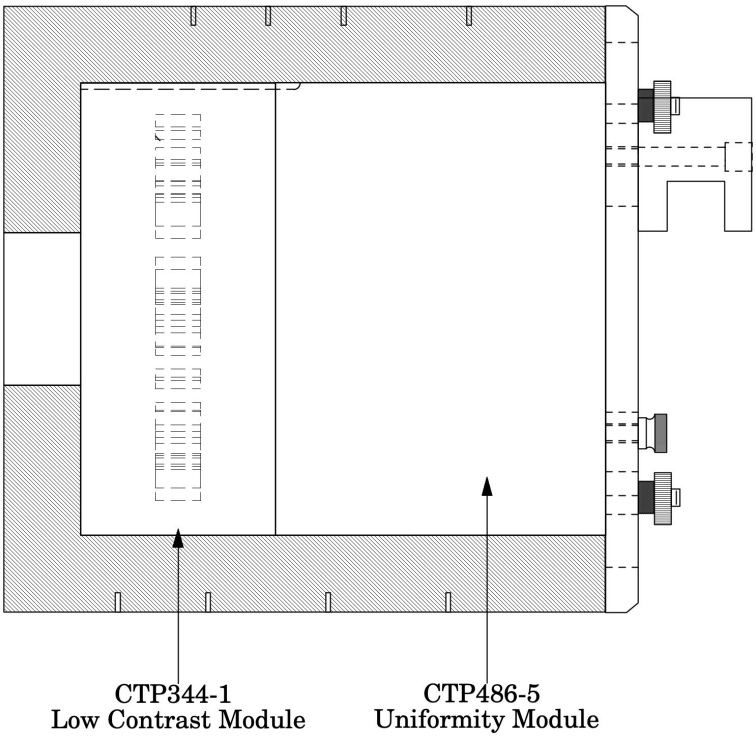

Scanning alignment

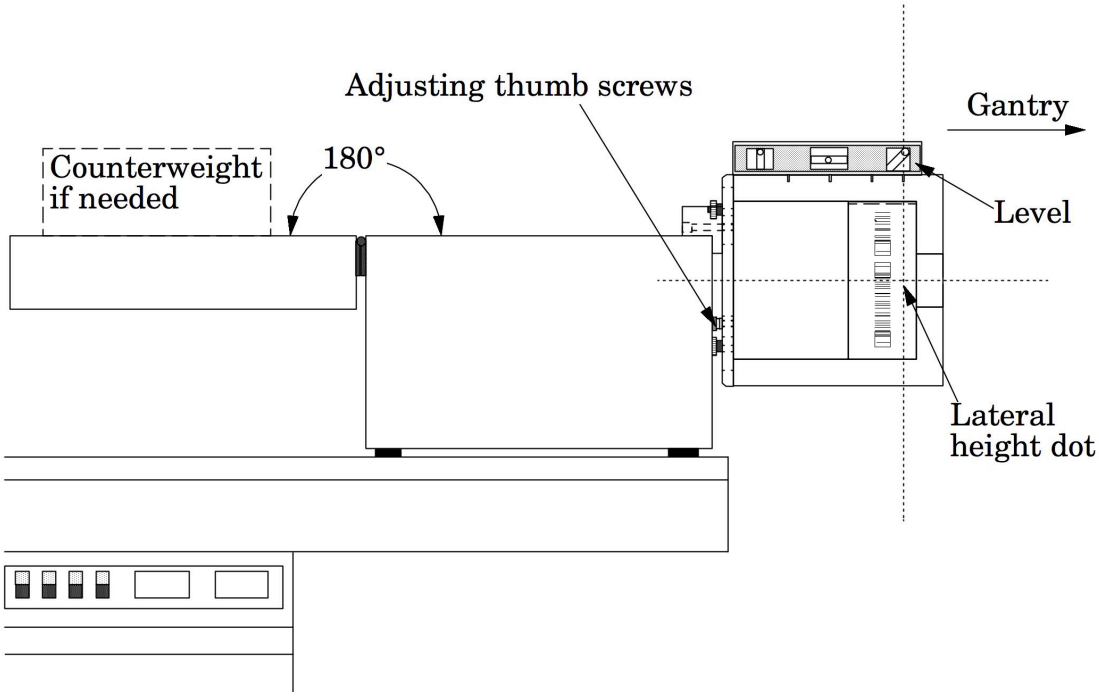

The Catphan® 346 Phantom comes with a Catphan® case and mount. By mounting the phantom on the case it can be cantilevered off the edge of the table eliminating table artifacts. Adjusting thumb screws enables the phantom to be leveled.

CTP344-1 low contrast module

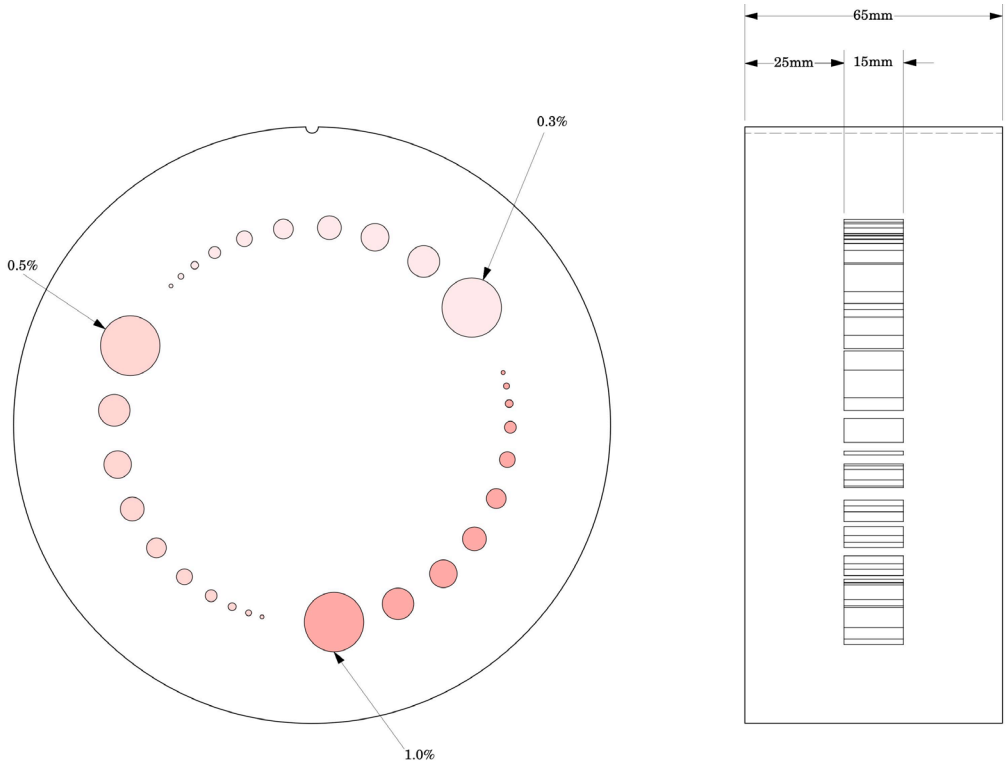

The low contrast targets have the following diameters and contrasts:

Target diameters
1.0mm
1.5mm
2.0mm
3.0mm
4.0mm
5.0mm
6.0mm
7.0mm
8.0mm
15.0mm

Nominal target contrast levels: 0.3% (±.05%), 0.5% (±.05%), and 1.0% (±.05%).

Since the target contrasts are nominal, the actual target contrasts need to be determined before testing specific contrast performance specifications. The actual contrast levels are measured by making region of interest measurements over the larger target, and in the local background area. To determine actual contrast levels, average the measurements made from several scans.

It is important to measure the background area adjacent to the measured target because “cupping” and “capping” effects cause variation of CT numbers from one scan region to another. Position the region of interest to avoid the target edges. The region of interest should be at least 4 x 4 pixels in diameter. Because low contrast measurements are “noisy”, it is advisable to calculate the average of the multiple measurements made from several scans.

Carefully monitor the mAs setting and the presence of any dose-modulation and or dose

reducing methods being used, because the photon flux will improve with increased x-ray exposure. The size of the targets visualized under various noise levels can be used to estimate information on contrast detail curves.

All of the targets in each contrast group are cast from a single mix to assure that the contrast levels will be the same for all targets.

The equation below can be used in conjunction with other published models of target detection in CT, to convert the measured contrasts and diameters to other estimated specified contrasts and diameters.

(Measured Contrast) * (smallest diameter discernible) = Constant

example: 0.3% contrast * 3mm diameter @ 0.5% = 1.5